CAT. NO	COLOR FINISH	CONFIG NO.	MATL.
NPS4BK	BLACK	001	POLYCARBONATE
NPS4	BROWN	001	POLYCARBONATE
NPS4GY	GRAY	001	POLYCARBONATE
NPS4I	IVORY	001	POLYCARBONATE
NPS4LA	LIGHT ALMOND	001	POLYCARBONATE
NPS3W	WHITE	001	POLYCARBONATE
NPS264BK	BLACK	026	POLYCARBONATE
NPS264	BROWN	026	POLYCARBONATE
NPS264GY	GRAY	026	POLYCARBONATE
NPS264I	IVORY	026	POLYCARBONATE
NPS264LA	LIGHT ALMOND	026	POLYCARBONATE
NPS264W	WHITE	026	POLYCARBONATE

NOTES :
1. INCHES (MM)
2. ALL PLATES HAVE COME WITH SUB-PLATE ASSY SCREWS.
3. SEE PAGE TWO FOR CONFIGURATION DIMENSIONS

M-13134 | 1

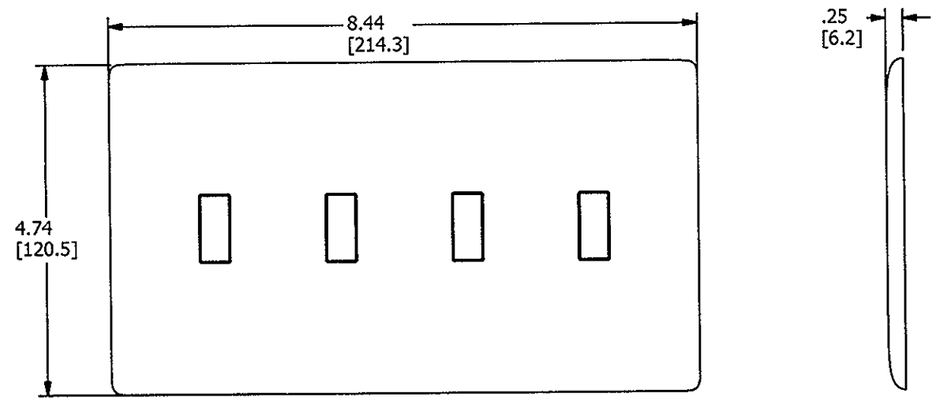

4 GANG PLATE BASIC
OUTSIDE DIMENSIONS

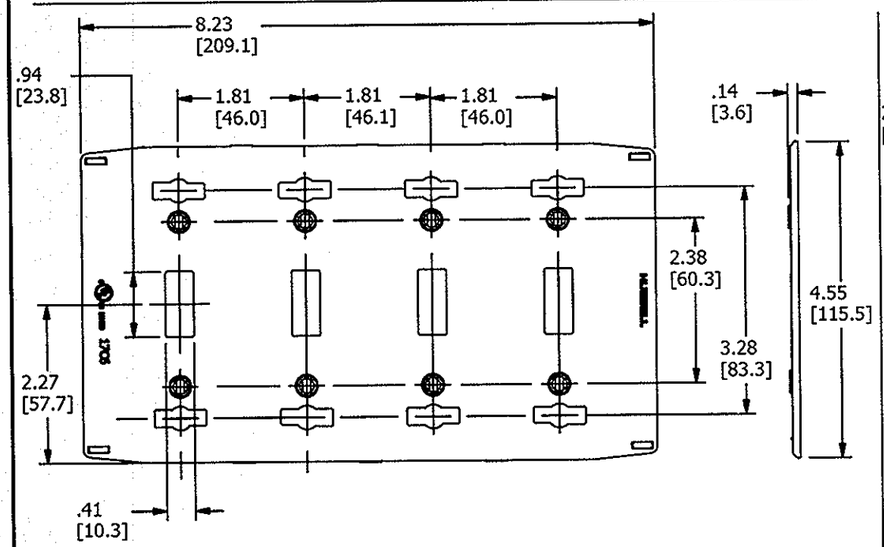

TOGGLE SWITCH PLATE
SUB-PLATE

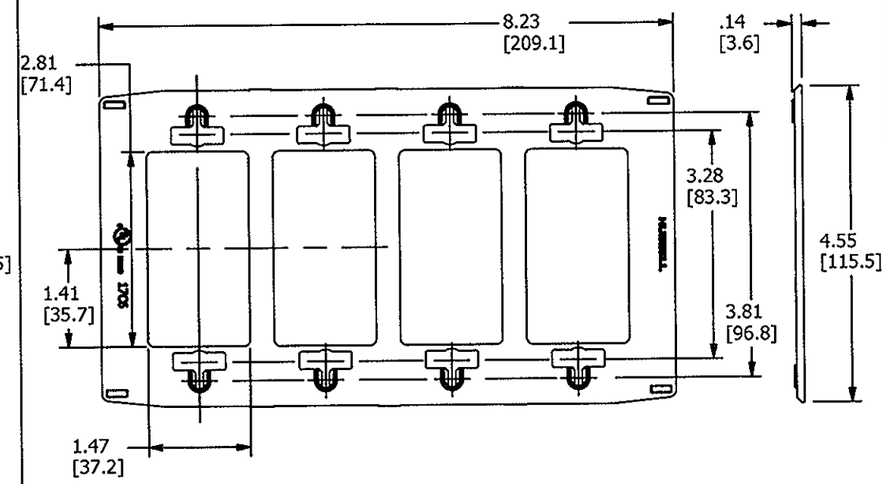

GFI/RECTANGLUAR OPENING
SUB-PLATE

LIST OF PARTS

DESCRIPTION	MATERIAL	FINISH
SNAP-ON WALL PLATE	POLYCARBONATE	
SUB PLATE	POLYCARBONATE	
SCREWS	STEEL	

SYM	DESCRIPTION	APPRO	DATE
1	RELEASED FOR PRODUCTION PER DCN 21776	DMP	11/5/15

THE DESIGN AND DIMENSIONS OF THE PRODUCT SHOWN ON THIS DRAWING ARE SUBJECT TO CHANGE WITHOUT NOTICE

TITLE
4 GANG SNAP-ON SCREWLESS WALLPLATES

TOLERANCES UNLESS OTHERWISE SPECIFIED
FRACTIONS ±1/64
DECIMALS ±.005
ANGLES ±2°

WIRING DEVICE-KELLEMS
HUBBELL INCORPORATED
SHELTON, CT

DR. BY D.PECK | APP. BY
TR. BY D.PECK | SCALE NTS
CHK'D BY | DATE 11/4/2015

DIMENSION SHEET FOR CAT. NO.
REPAIRABLE ☐
NON-REPAIRABLE ☒
B
M-13134
1

CODE 74545